Figure 3 (Part 2)

L823 0841 PM1440GT Control Electronics

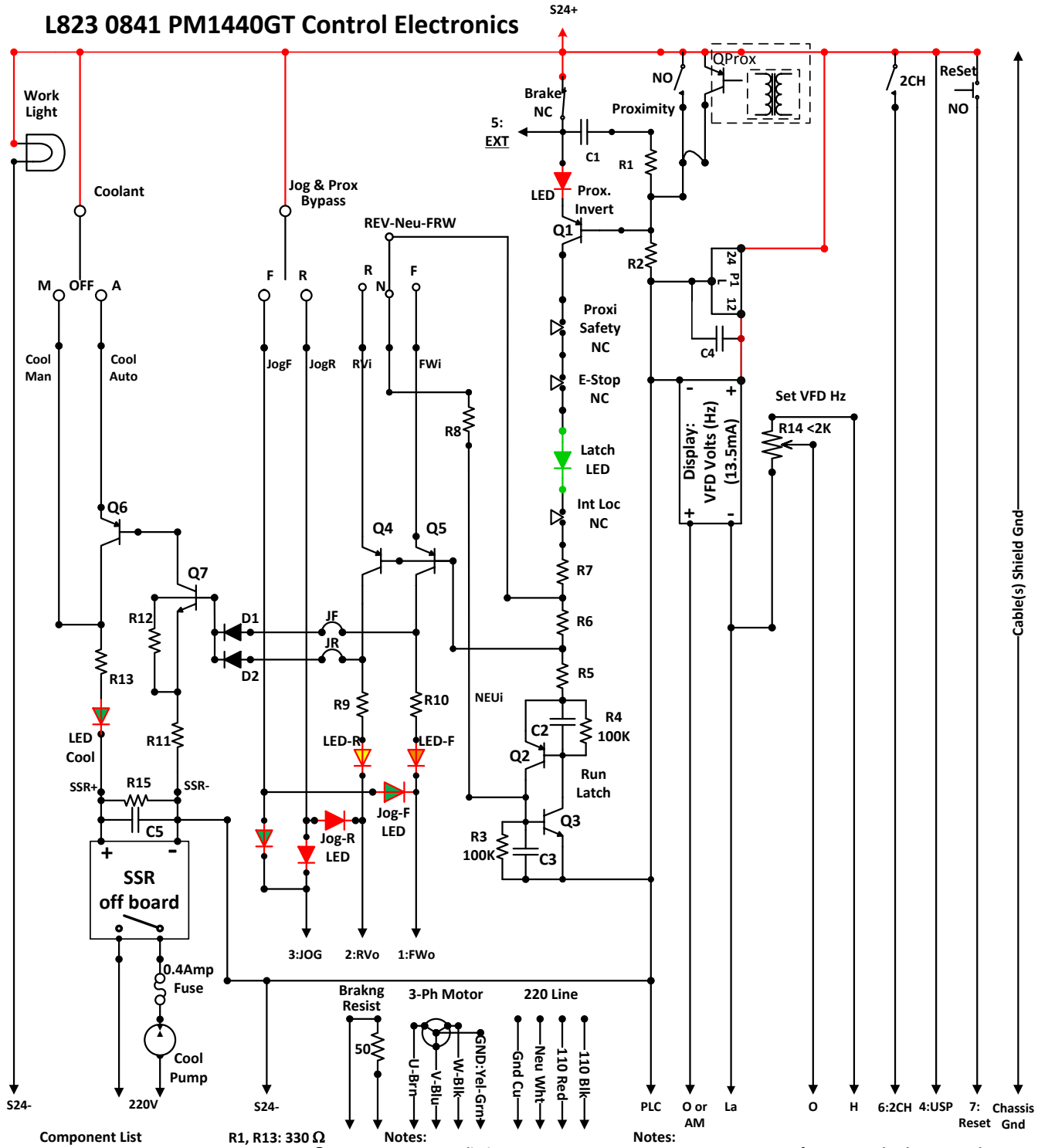

Component List
Q1-2, Q4-6: pnp 2N3906
Q3,Q7: npn 2N3904
C1-C5: 1uf
LEDs Vf=2V, Latch Vf=2.5V
D1: 1N4001 Vf=.6-.7
D2: 1N4001 (Optional)
P1: LM7812, +12V Reg.
SSR: 40DA, FOTEK
JF,JR: Cut Jumpers
Supply S24: 24VDC, 1Amp

R1, R13: 330 Ω
R2, R12: 10KΩ
R3-R4: 100K Ω
R5: 6.2K Ω
R6: 470 Ω
R7: 0-100 Ω
R8,R11, R15: 22K Ω
R9-R10: 330 Ω
R14:Pot. 1k<R<2k Ω
R-Brake=50 Ω, 400W (8x 25Ω by 50W/R)

Notes:
R9,R10,R13: limits I
C1,R1-de-bounce
C1,R2-soft start
R2: Q1 bias
R3-4,C2-3: leakage & noise
R5, R6: Bias control
R7=0 when Latch LED
Q7, R11-12: inverter, limit I
P1: Display isolation supply
-O => Display=VFD input at Pot.
-AM=> Display =VFD Output Option

Notes:
Prox In to S24 starves Ic of Q1 = cause latch to open ckt.
D2: Optional: Disable Rev Auto Cool via JR cut
SSR requires ~7.5MA@15V
VFD Program. input parameters:
-Measured: P24 = 23.26 volts (not used here)
-Manual Spec: logic input R ~ 4.7KΩ
-Measured: Input "On" current = 4.7mA @ 24v
--Hence, R(input) ~ 4.95KΩ (close)
-Measured min. Trigger current ~ 1.56mA
-Assume: >2mA to always trigger (use ~3 - 4mA for > SNR)
--Hence max external logic R < 12K (no other voltage drops).

Lambeth Systems owns all rights and an exclusive license to this public document and its associated Figures, Tables, and Photos. Publishing it again does not relinquish those rights nor the exclusive license.