Best Services - Shop Wiring for 3-phase equipment

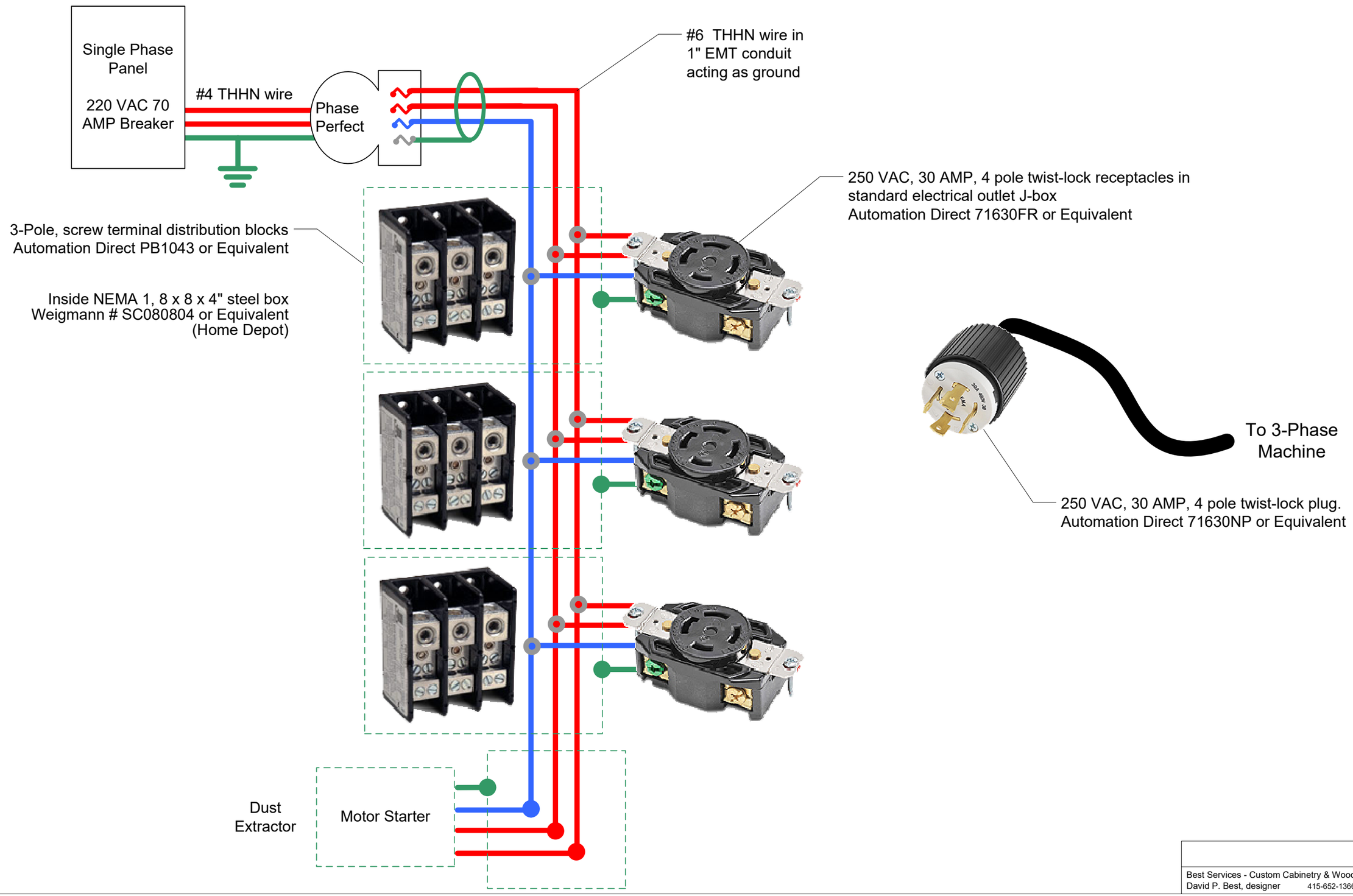

Best Services - Custom Cabinetry & Woodworking
David P. Best, designer 415-652-1366