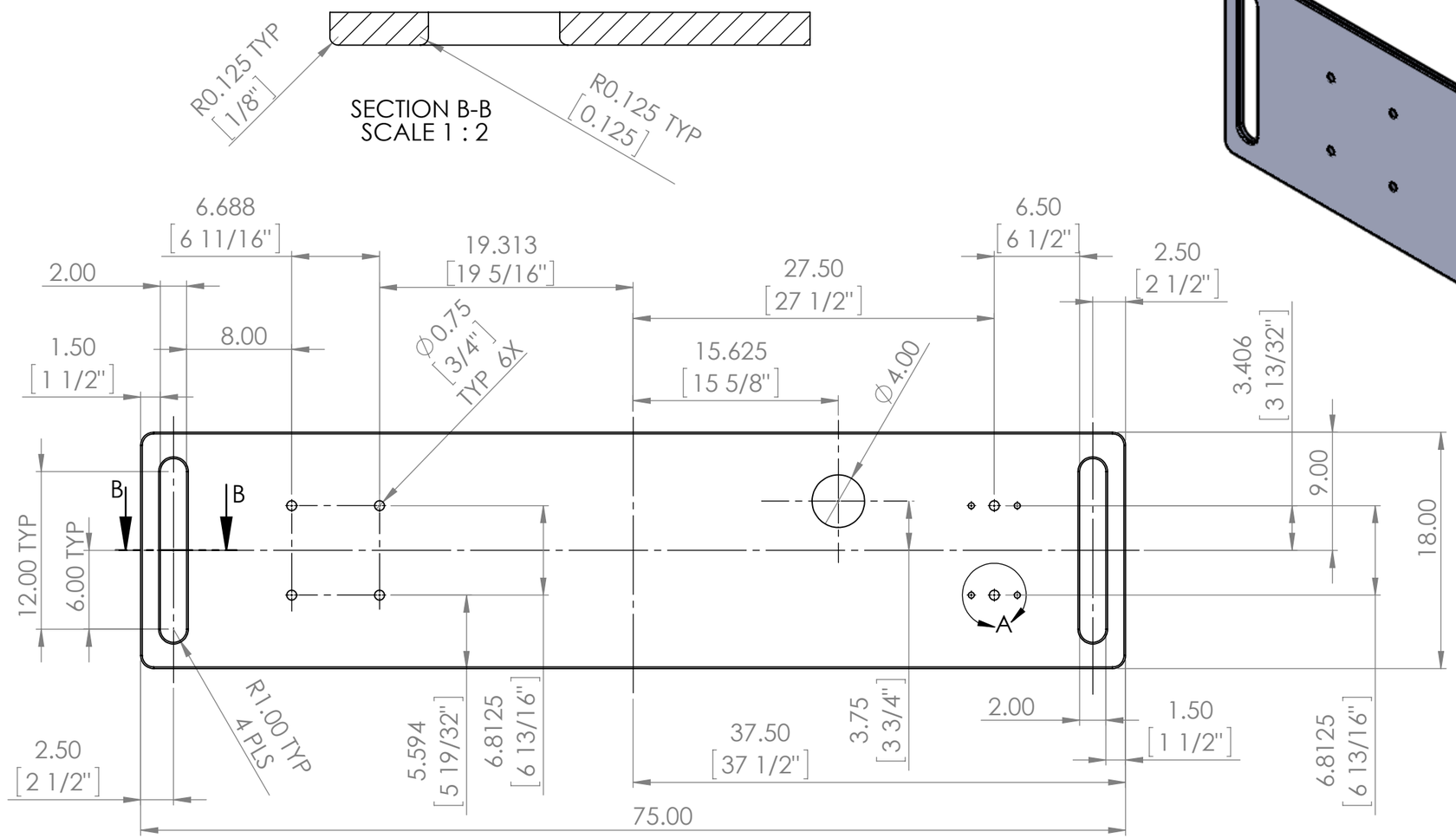

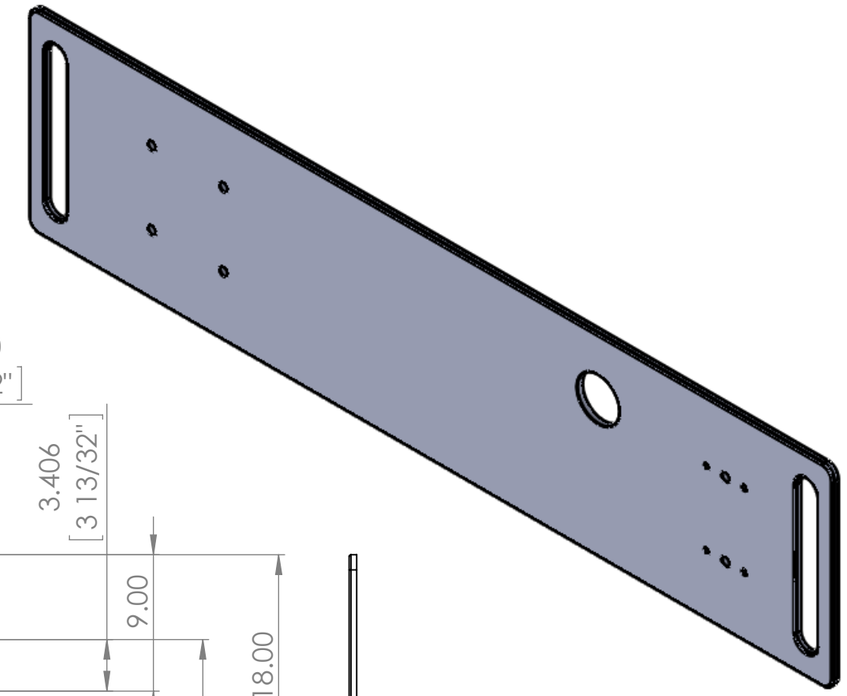

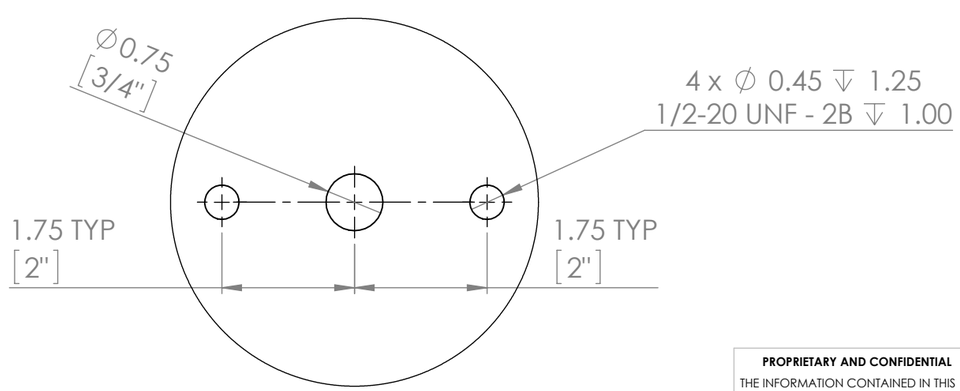

DETAIL A
SCALE 1 : 2

PROPRIETARY AND CONFIDENTIAL

THE INFORMATION CONTAINED IN THIS DRAWING IS THE SOLE PROPERTY OF <INSERT COMPANY NAME HERE>. ANY REPRODUCTION IN PART OR AS A WHOLE WITHOUT THE WRITTEN PERMISSION OF <INSERT COMPANY NAME HERE> IS PROHIBITED.

NEXT ASSY	USED ON
APPLICATION	

UNLESS OTHERWISE SPECIFIED:

DIMENSIONS ARE IN INCHES
TOLERANCES:
FRACTIONAL ±
ANGULAR: MACH ± BEND ±
TWO PLACE DECIMAL ±
THREE PLACE DECIMAL ±

INTERPRET GEOMETRIC TOLERANCING PER:

MATERIAL

FINISH

DO NOT SCALE DRAWING

	NAME	DATE
DRAWN	TZOVAR	3/06/18
CHECKED		
ENG APPR.		
MFG APPR.		
Q.A.		

COMMENTS:
Mike Rissell
Owner

Zovar Productions LLC
West Milwaukee, Wi. 53214

TITLE:
STEEL LATHE PLATE
75" X 18" X 1/2"

SIZE **B** | DWG. NO. LATHE PLATE | REV

SCALE: 1:10 | WEIGHT: | SHEET 1 OF 1