PM1340GT VFD Wiring Diagram for Hitachi WJ200 with an External Power Supply, Proximity Limit SW, Lighted E-Stop safety, 2-stage Braking, Joystick For/Rev JOG and Lighted Coolant SW

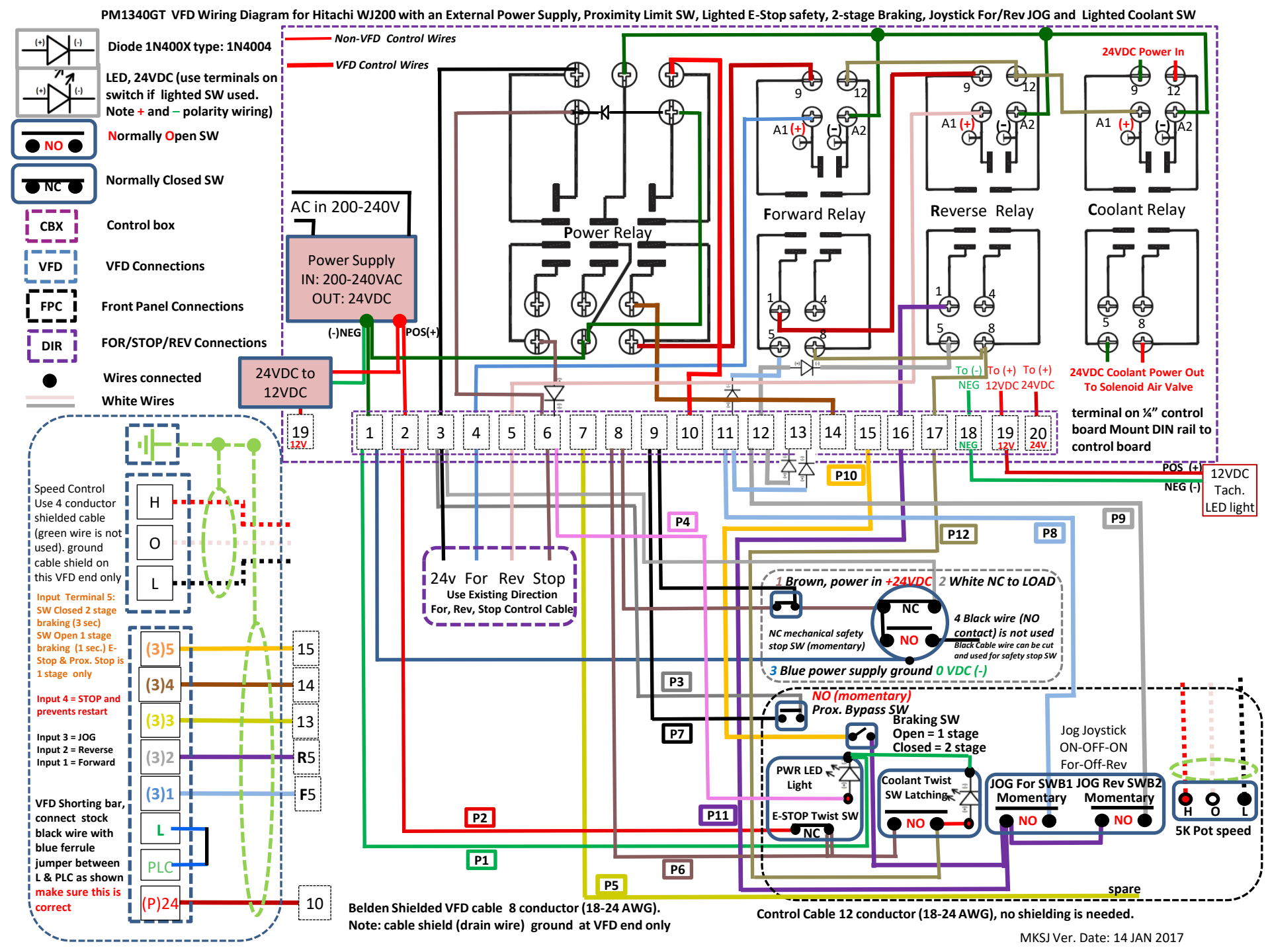

MKSJ Ver. Date: 14 JAN 2017