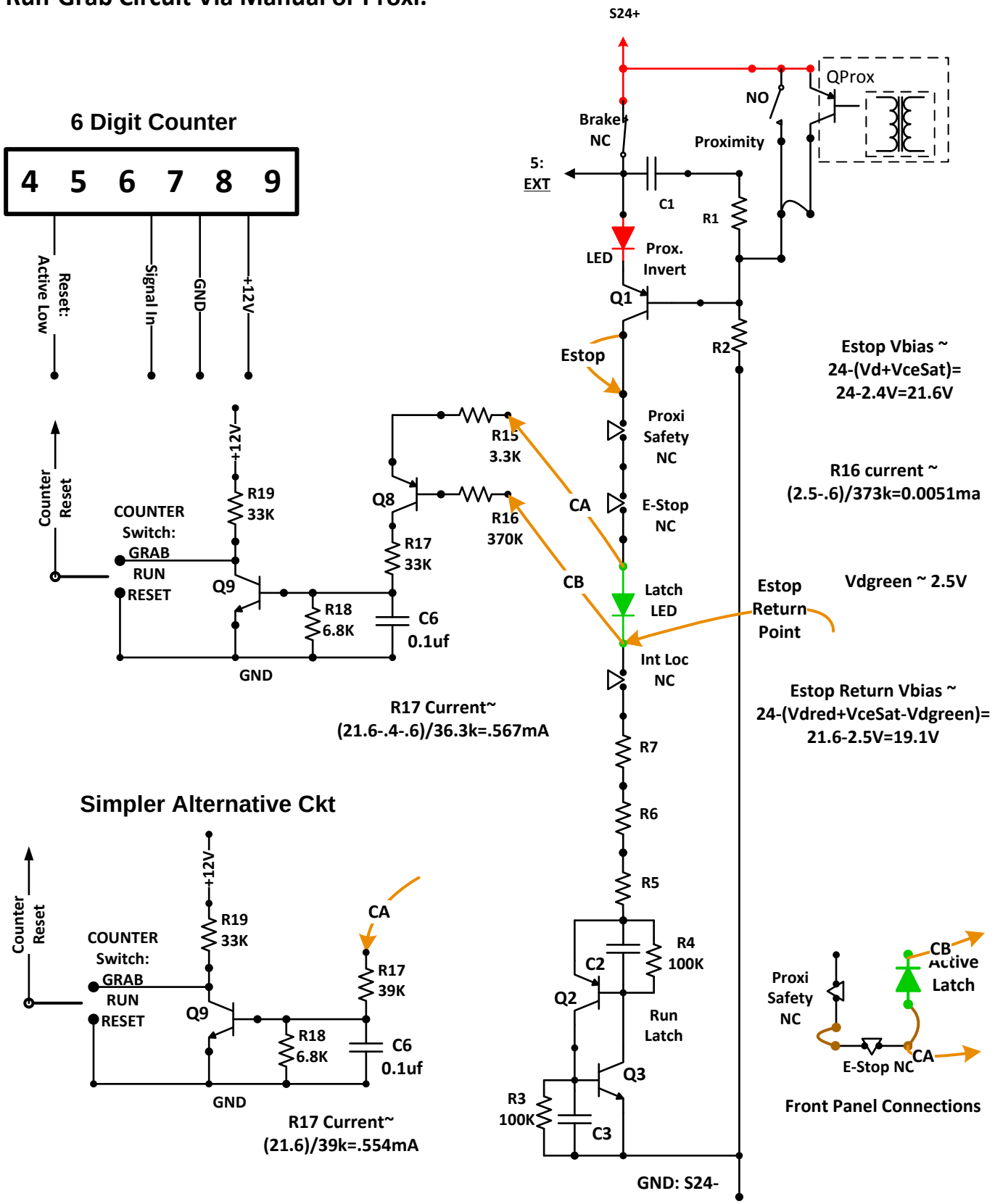LC26_1555 PM1440GT Front Panel Counter Reset-Run-Grab Circuit Via Manual or Proxi.